Blue Level GmbH
Säntisstrasse 17
CH-8280 Kreuzlingen
Switzerland

eShop: http://www.schuhputzmaschine.ch
eMail: info@bluelevel.ch

Sohlenreinigungsmaschine TROCKEN 150

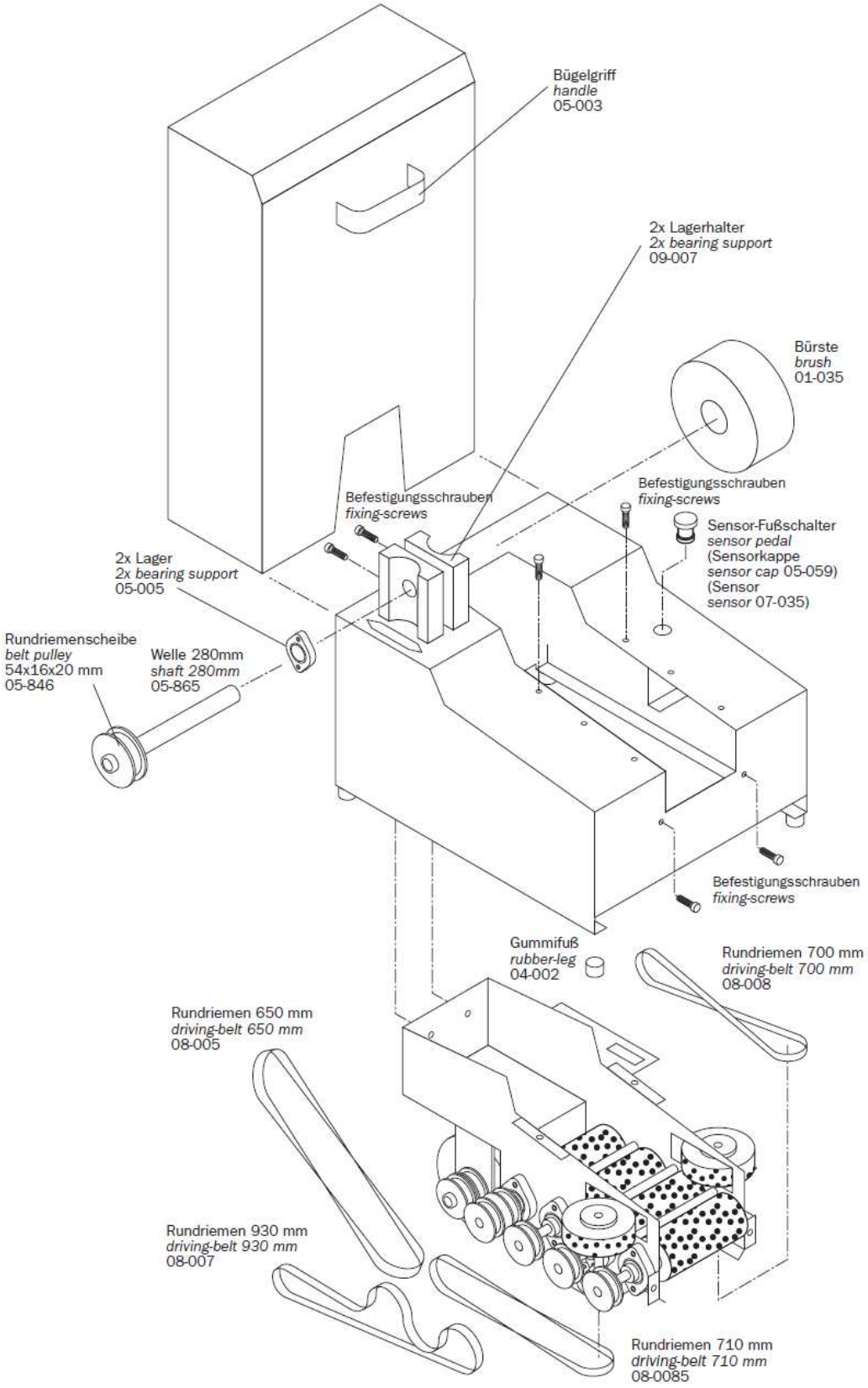

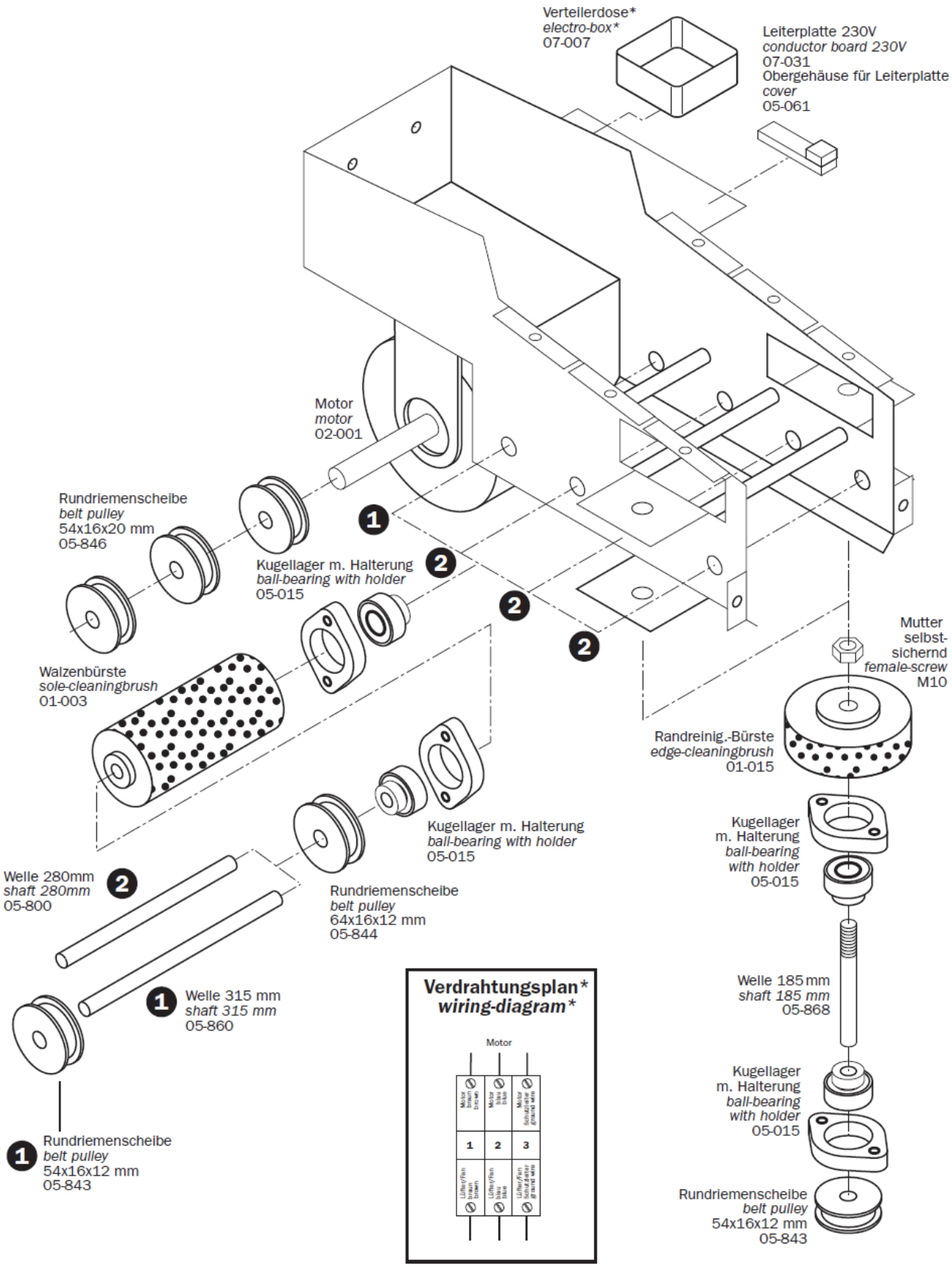
Verteilerdose*
electro-box*
07-007
Leiterplatte 230V
conductor board 230V
07-031
Obergehäuse für Leiterplatte
cover
05-061
Motor
motor
02-001
Rundriemenscheibe
belt pulley
54x16x20 mm
05-846
Kugellager m. Halterung
ball-bearing with holder
05-015
Walzenbürste
sole-cleaningbrush
01-003
Mutter
selbst-
sichernd
female-screw
M10
Randreinig.-Bürste
edge-cleaningbrush
01-015
Kugellager
m. Halterung
ball-bearing
with holder
05-015
Welle 185 mm
shaft 185 mm
05-868
Kugellager
m. Halterung
ball-bearing
with holder
05-015
Rundriemenscheibe
belt pulley
54x16x12 mm
05-843
Kugellager m. Halterung
ball-bearing with holder
05-015
Welle 280mm
shaft 280mm
05-800
Rundriemenscheibe
belt pulley
64x16x12 mm
05-844
Welle 315 mm
shaft 315 mm
05-860
Rundriemenscheibe
belt pulley
54x16x12 mm
05-843
Verdrahtungsplan*
wiring-diagram*
Motor
1
2
3